FLIR FX™

INDOOR WIRELESS HD VIDEO MONITORING

The **FLIR FX** is a versatile wireless HD camera that allows you to keep an eye on the things you care about – anytime, any place. Monitor your pet's behavior while you're at work, or your baby during naptime; hear an elderly relative's cry for help, or check on the house when you're not home.

SEE MORE. WATCH LESS – RapidRecap™

Review the day in a minute by watching cloud-recorded events simultaneously.

- Pick the time frame to review, and RapidRecap* will compile events into condensed video clips
- Spend less time reviewing videos
- Easily share downloaded videos with friends

KEEP AN EYE ON WHAT MATTERS MOST – SmartZone™

Recordings and alerts happen only in your specified area with motion sensing technology.

- Using the FLIR FX app, you select the areas you want to monitor
- When an object moves inside the SmartZone area, you will receive a notification on your smartphone or tablet, and the camera will record
- SmartZone is designed to reduce unwanted motion triggers in areas you're not worried about

ANYWHERE, ANY PLACE – Cordless

It's portable, has a four-hour internal battery, and records 1080p to an included on-board microSD card.

- Outdoor option includes commercial-grade infrared illumination to see up to 65 feet at night
- The optional waterproof, submersible Sport Housing and mounting accessories capture all the action in stunning HD
- Dash Mount option utilizes the built-in accelerometer to automatically record when your vehicle is in motion or in an accident

*Cloud subscription required, 30-day free trial included

Imaging Specifications

System Overview	FLIR FX
Image Sensor	4MP, 1/3" CMOS
Resolution	Up to 1920 x 1080 (1080p)
Still Image Capture	4MP
Frame Rate	Up to 30fps
Compression	H.264
Lens	2.45mm F2.5
Field of View	Up to 160° horizontal video dewarping
Night Vision LEDs	6 IR LED in camera
Night Vision Range	33feet / 10 meters
WiFi	2.4GHz 802.11 b/g/n
Apps	iOS®, Android™
Buttons	Power, Wi-Fi, Manual Record
LED Indicators	Cloud Mode, Direct Mode, Recording, Charging
MicroSD	8GB to 64GB microSDHC or microSDXC supported, class 10 or higher
Microphone	Yes
Speaker	Yes
Accelerometer	Yes
Battery – Camera Only	1130mAh
Battery Life – Camera Only*	Up to 2 hours
Dimensions – Camera Only*	2.0" / 1.2" / 2.3" (51mm / 31mm / 59mm)
Weight – Camera Only	0.2lb / 0.08kg
Operating Temperature	0 ~ 104°F / 0 ~ 40°C
USB	microUSB for power/USB storage mode
Power Adapter	5V / 2.0A
Indoor Stand Specs:	
Extended Battery	1130mAh
Battery Life – Camera with Stand	Up to 4 hours
Temperature Sensor	Yes
Humidity Sensor	Yes
Dimensions – Camera with Stand	2.7" / 2.3" / 4.7" (70mm / 60mm / 121mm)
Weight – Camera with Stand	0.45lb / 0.20kg

*Extended battery included with indoor stand and sport accessory.

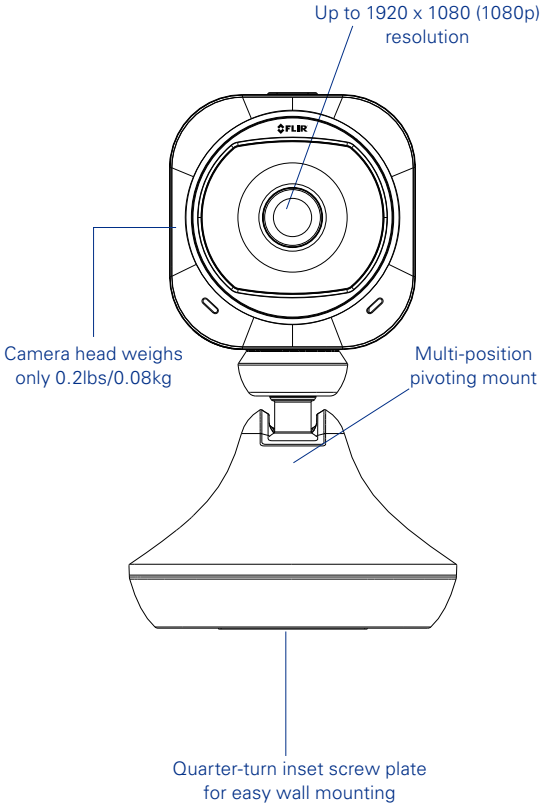

PORTLAND
Corporate Headquarters
FLIR Systems, Inc.
27700 SW Parkway Ave.
Wilsonville, OR 97070
USA
PH: +1 866.477.3687

SANTA BARBARA
FLIR Systems, Inc.
70 Castilian Drive
Goleta, CA 93117
USA
PH: +1 805.690.5097

CANADA
FLIR Systems, Ltd.
250 Royal Crest Court,
Markham, Ontario
L3R 3S1 Canada
PH: +1 905.946.8589

BALTIMORE
901 Elkridge Landing RD
Linthicum, MD 21090
USA
PH: +1 410.525.1902

www.flir.com
NASDAQ: FLIR

Equipment described herein may require US Government authorization for export purposes. Diversion contrary to US law is prohibited. Imagery for illustration purposes only. Specifications are subject to change without notice. ©2014 FLIR Systems, Inc. All rights reserved. (Updated 01/15)